# 2. Front Seat

## A: REMOVAL

1) Disconnect the ground cable from the battery.

**CAUTION:**
**The airbag system is fitted with a backup power source. After disconnecting the battery ground cable, the airbag may deploy if you do not wait for 20 seconds before starting the service of airbag system.**

2) While pressing the headrest lock button, remove the headrest.

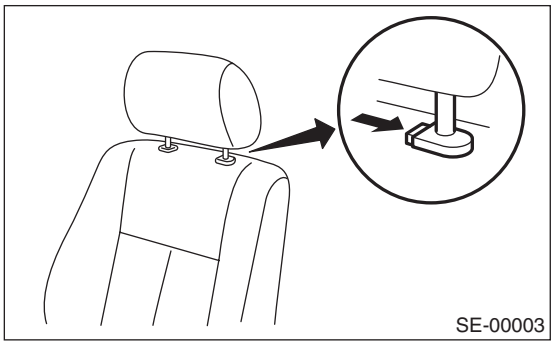


3) Tilt the backrest forward.
4) Move the seat to full front end.
5) Remove the bolt cover at rear end of the slide rail.

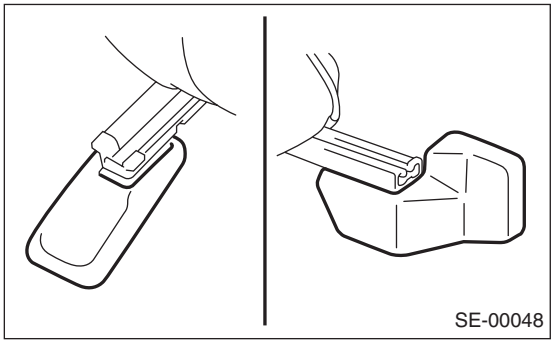


6) Remove the two bolts at rear end of slide rail.

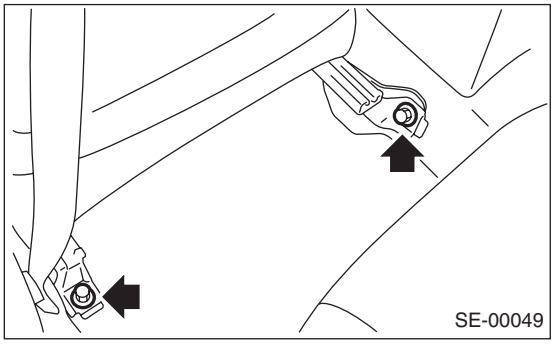


7) Move the seat to full rear end.

8) Remove the two bolts at front side of slide rail.

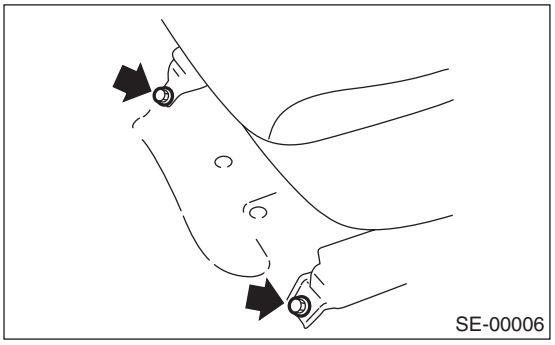


9) Disconnect the connector under the seat.
- Seat position sensor connector (driver's seat)
- Seat belt buckle switch connector (driver's seat)
- Harness connector of occupant detection control module (passenger's seat)
- Side airbag connector
- Seat heater connector (model with seat heater)

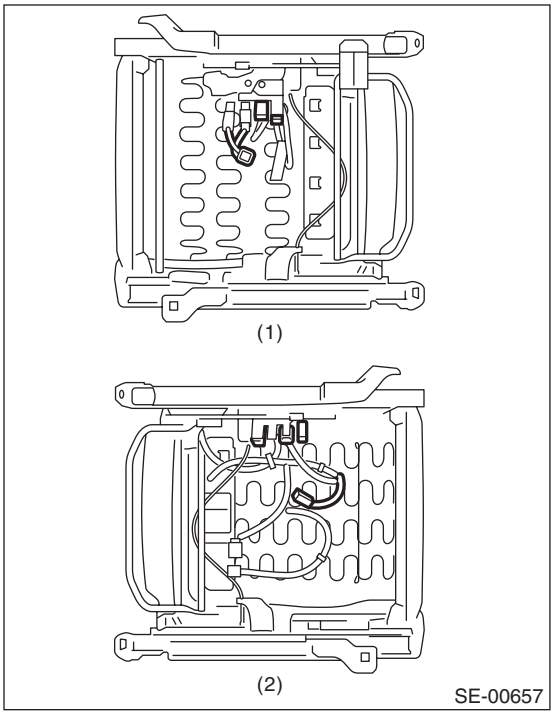


(1) Driver's seat
(2) Passenger's seat

10) Remove the front seat from vehicle.

## B: INSTALLATION

Install in the reverse order of removal.

**CAUTION:**
**After installing the driver's seat, use the Subaru Select Monitor to confirm that the seat position sensor LH is operating properly. <Ref. to AB(diag)-29, DISPLAY OF STATUS INFORMATION, OPERATION, Subaru Select Monitor.>**

***Tightening torque:***
***Refer to "COMPONENT" of "General Description". <Ref. to SE-2, FRONT SEAT, COMPONENT, General Description.>***

## C: DISASSEMBLY

**CAUTION:**
**Refer to "CAUTION" of "General Description" before starting the work. <Ref. to SE-6, CAUTION, General Description.>**

### 1. STANDARD SEAT

1) Remove the seat from vehicle. <Ref. to SE-7, REMOVAL, Front Seat.>
2) Remove the seat lifter cover using a flat tip screwdriver and loosen the inner bolt to remove the seat lifter lever.

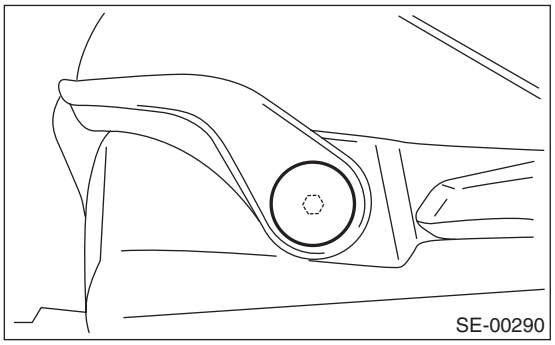


3) Remove the reclining lever and seat hinge outer cover.

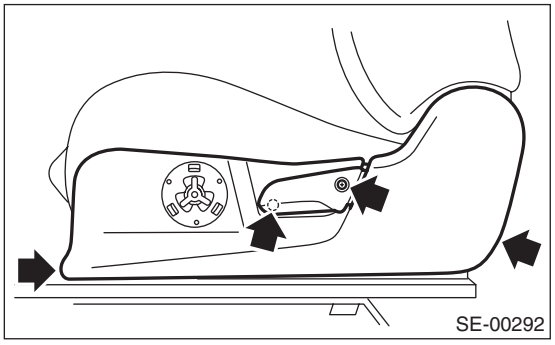


4) Remove the seat hinge inner cover.

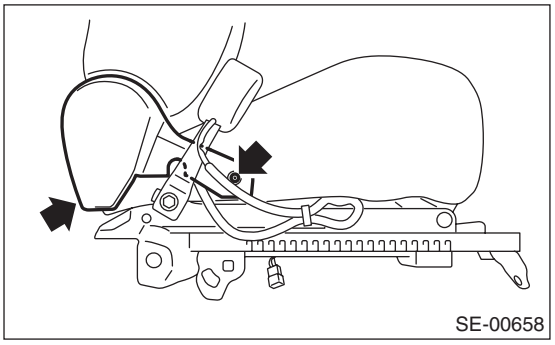


5) Remove the inner seat belt assembly.

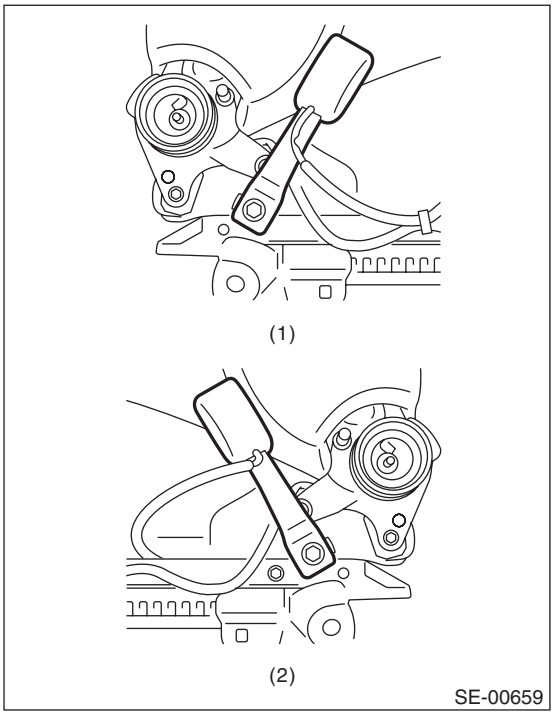


(1) Driver's seat
(2) Passenger's seat

6) Remove the two bolts from the reclining hinge on each left and right side.

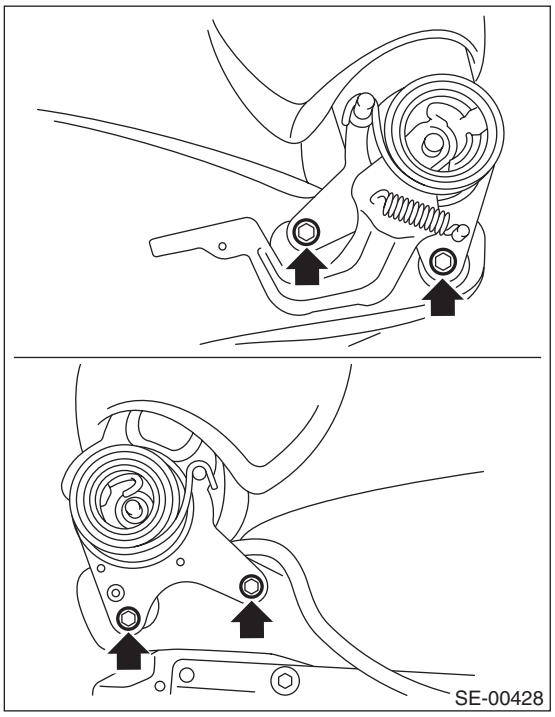


7) Remove the hook at the bottom-back side of backrest.

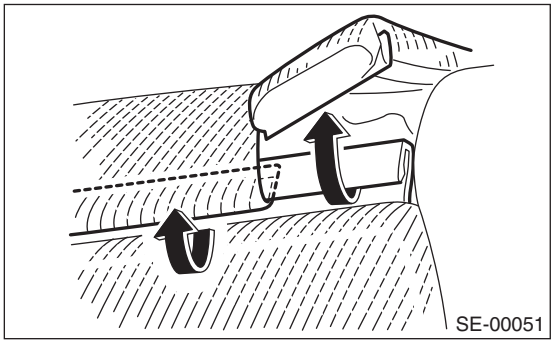


8) Open the fastener at the rear side of backrest.

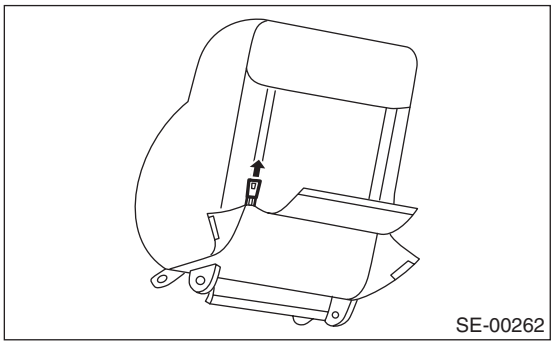


9) Remove the hog rings (A) of backrest cover.

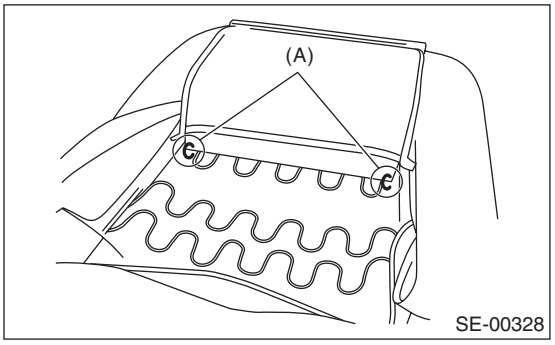


10) Remove the hog ring (A) which secures the backrest cover and backrest pad.

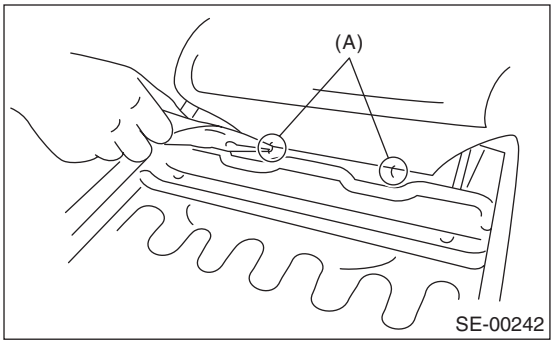


11) Open the zipper behind of backrest cover, and remove the hog rings (A) at the side-inner part of backrest from backrest frame.

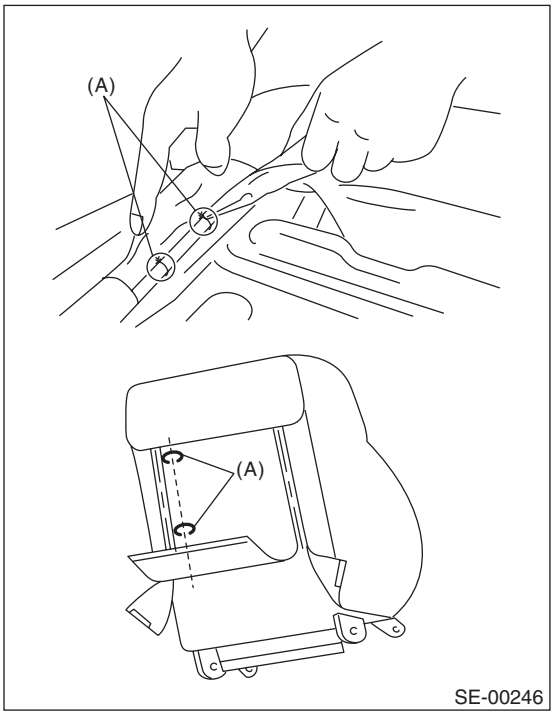

12) Remove the headrest bushing.

NOTE:
Push outside to remove it from the inside of seat.

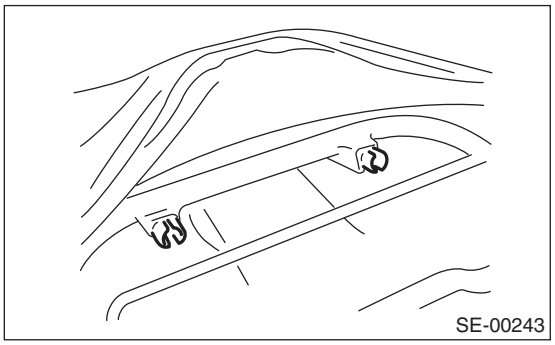


13) Pull out the backrest frame.

14) Remove the lower hog rings (A) on the front side of seat backrest.

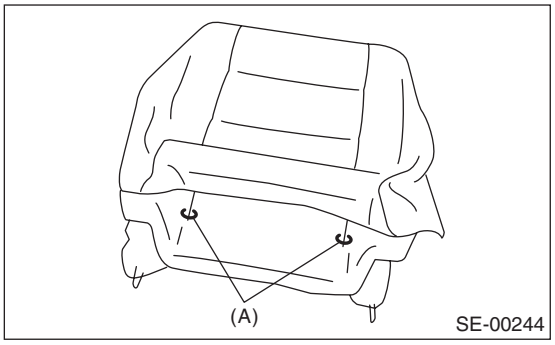


15) Remove the hog rings (A) at front of seat back, and then remove the seat back cover from seat backrest.

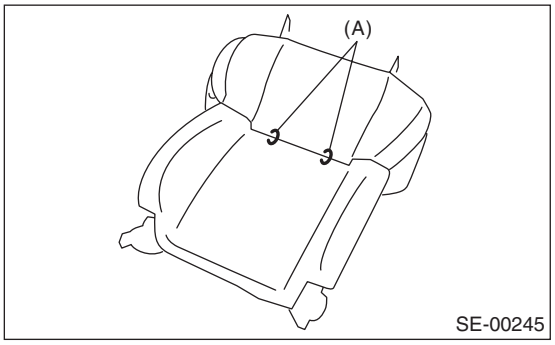


16) Remove the hooks (A), and then remove the seat cushion frame assembly.

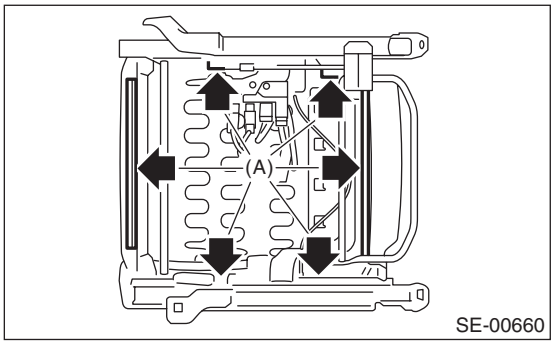


17) Remove the hog rings (A), and then remove the seat cushion cover from seat cushion pad.

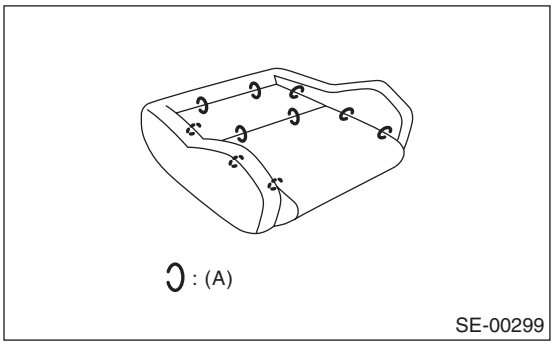


18) Remove the bolt of the sliding adjustment bar and connecting wire.

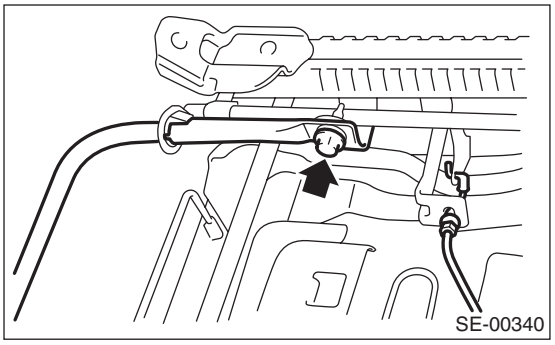


19) Remove the bolts, then remove the slide rail.

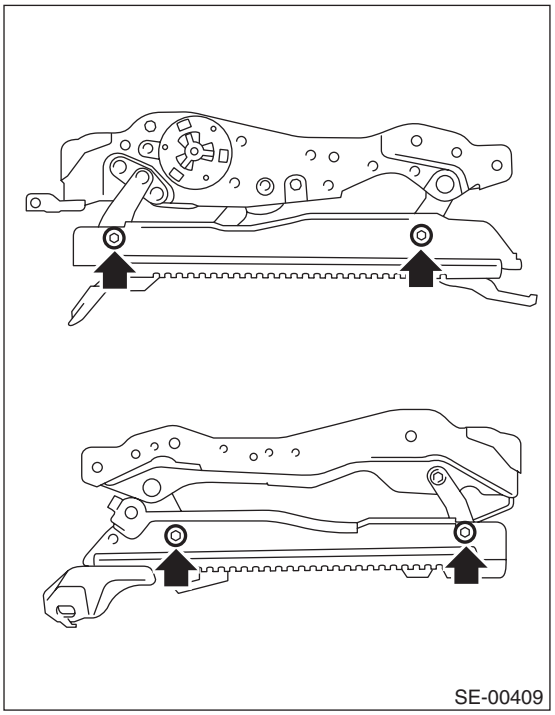

20) Open the fastener on the bottom of the headrest, then remove the headrest cover from the headrest.

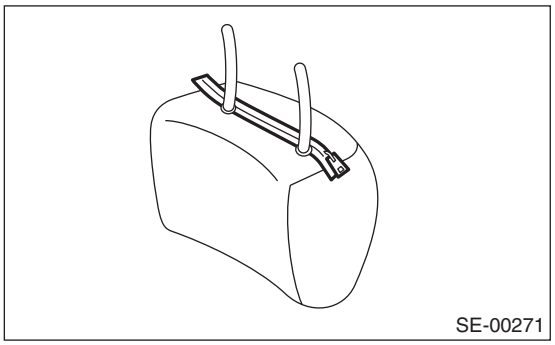


## 2. BUCKET TYPE SEAT

1) Remove the seat from vehicle. <Ref. to SE-7, REMOVAL, Front Seat.>

2) Remove the seat lifter cover using a flat tip screwdriver and loosen the inner bolt to remove the seat lifter lever.

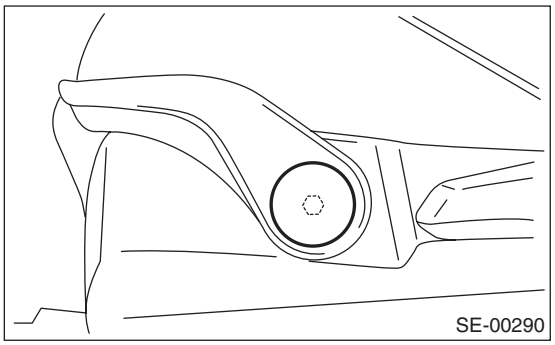


3) Remove the reclining lever and seat hinge outer cover.

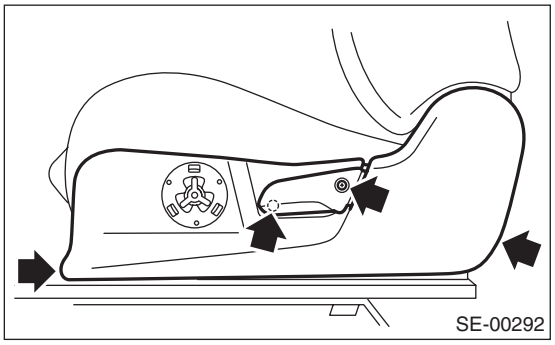


4) Remove the seat hinge inner cover.

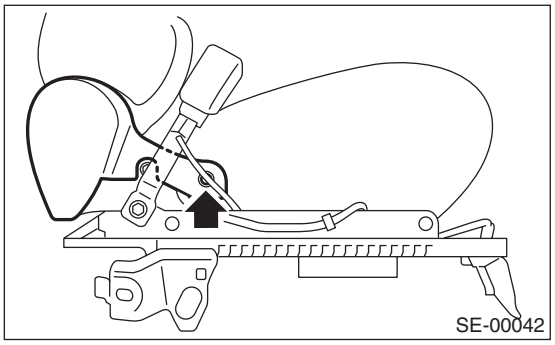


5) Remove the inner seat belt assembly.

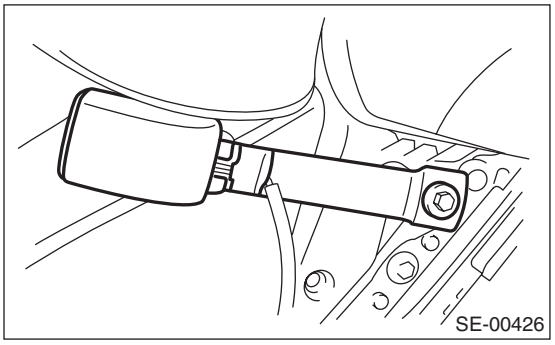


6) Remove the two bolts from the reclining hinge on each left and right side.

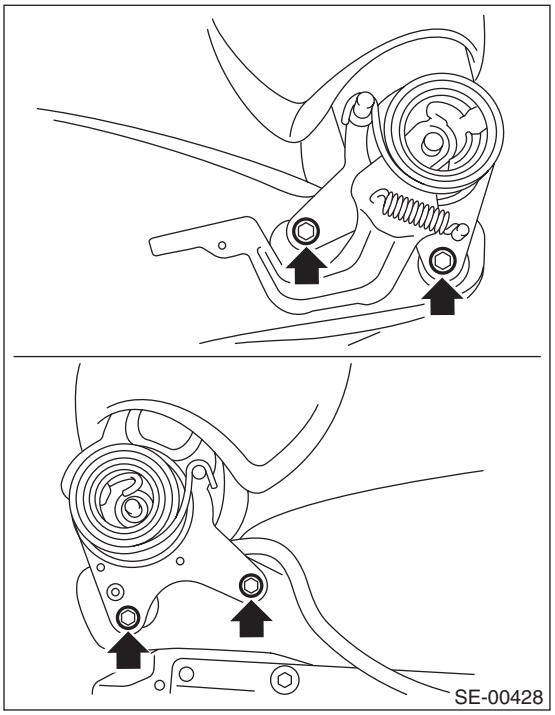


7) Remove the hook at the bottom-back side of backrest.

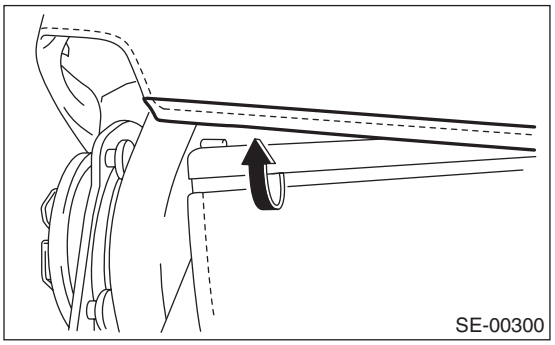

8) Remove the hooks (A), and then remove the seat cushion frame assembly.

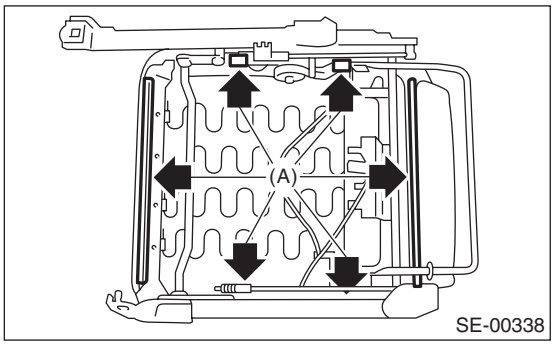


9) Remove the bolt of the sliding adjustment bar and connecting wire.

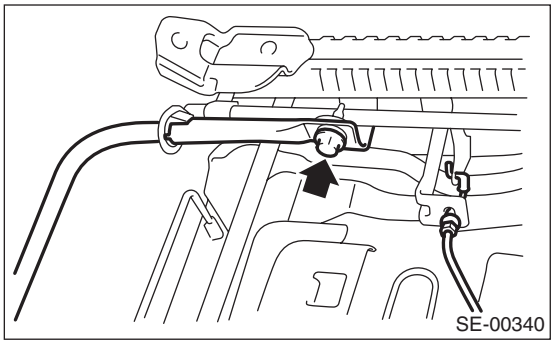


10) Remove the bolts, then remove the slide rail.

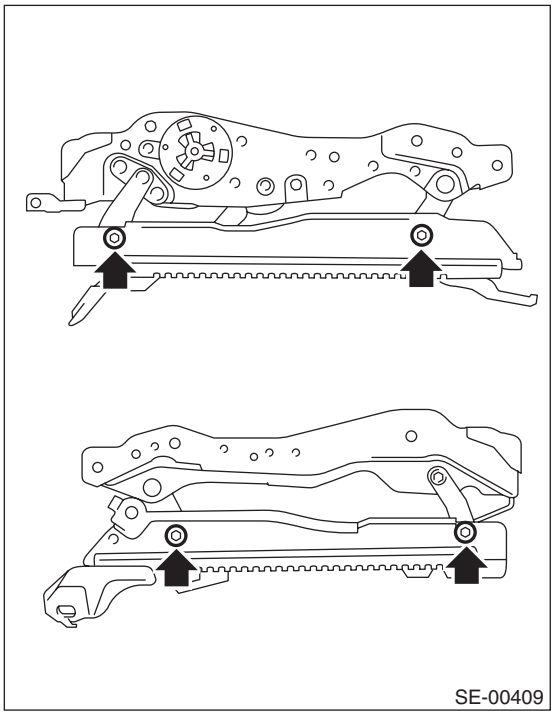


## D: ASSEMBLY

**CAUTION:**

**1. When the backrest cover is not installed securely, the side airbag module may not be deployed properly, therefore keep strictly to the following procedure.**

- **Be careful not to stain or damage the backrest cover during assembly.**
- **Always use new hog rings.**
- **Secure the hog ring using hog ring pliers.**
- **Install the hog rings to the specified points securely and make sure that no wrinkle or twisting on backrest cover.**

**2. Make sure to adhere to the following rules when assembling the passenger seat. Improper work procedures can cause the passenger detection system to not operate properly.**

- **If the seat cushion cover is removed or replaced, make sure to perform passenger detection system adjustment after installing the seat to the vehicle. <Ref. to OD(diag)-18, SYSTEM CALIBRATION (REZEROING), OPERATION, Subaru Select Monitor.>**
- **Failure to do so may cause improper activation of passenger's airbag.**
- **The passenger detection system (passenger seat only) control unit, passenger detection sensor, seat cushion pad and seat cushion frame are considered as a single seat cushion pad and frame assembly. Never remove the passenger detection control unit or the pressure sensor from the seat cushion frame.**
- **Do not remove the seat position sensor from the seat rail. (Driver's seat)**
- **If the seat cushion cover is removed, make sure to replace the wire on the seat cushion side with a new wire. (Passenger's seat)**
- **Make sure to install the hog rings/clips to the specified locations. Do not reuse hog rings.**

Assemble in the reverse order of disassembly.

***Tightening torque:***

***Refer to "COMPONENT" of "General Description". <Ref. to SE-2, FRONT SEAT, COMPONENT, General Description.>***